FORCE Outboards

service bulletin

No. 94-3

Oil Injection Conversion Kit- Sport Jet 90

Serial Number 0E066624 And Above

Sport Jet 90 powerheads with serial numbers 0E066624 and higher are built with either oil injection systems already assembled on them or contain all the necessary components to have the oil injection system installed as an accessory kit.

The part number for the Oil Injection Kit is **820658A1**.

The kit contains the oil pump, hoses,oil reservoir ,oil level warning module, brackets, fasteners, wires and installation instructions.

It is important to know that this oil injection conversion kit can only be installed on Sport Jet 90 powerheads with serial numbers 0E066624 and higher. These powerheads contain the necessary machining and internal components to allow the installation of the kit. The conversion kit CANNOT be installed on earlier models with serial numbers lower than 0E066624.

The oil injection conversion kit can be ordered through your normal distribution center. Availability is March 1, 1994.
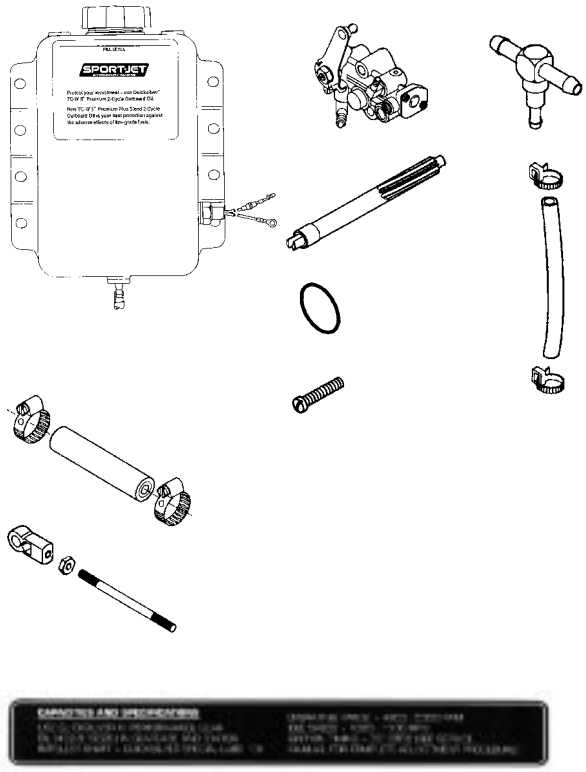
Oil Injection Conversion Kit Components